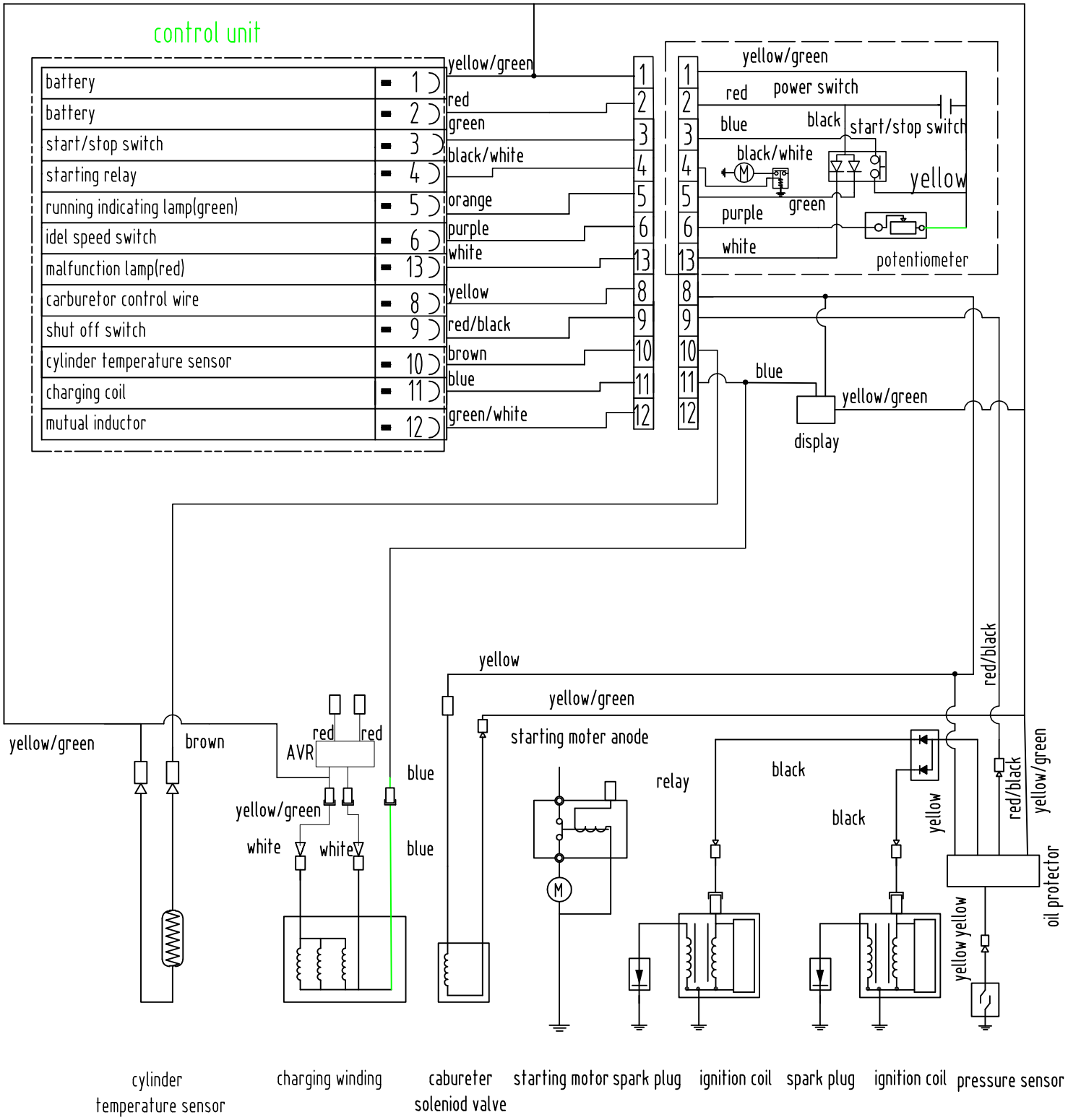
control unit
battery 1
battery 2
start/stop switch 3
starting relay 4
running indicating lamp(green) 5
idel speed switch 6
malfunction lamp(red) 13
carburetor control wire 8
shut off switch 9
cylinder temperature sensor 10
charging coil 11
mutual inductor 12
yellow/green
red
green
black/white
orange
purple
white
yellow
red/black
brown
blue
green/white
yellow/green
red
power switch
blue
black
start/stop switch
black/white
yellow
green
purple
white
potentiometer
blue
display
yellow/green
yellow
yellow/green
red/black
yellow/green
brown
red
red
AVR
blue
yellow/green
white
white
blue
starting moter anode
relay
black
black
yellow
red/black
yellow/green
oil protector
yellow yellow
cylinder temperature sensor
charging winding
caburetor soleniod valve
starting motor
spark plug
ignition coil
spark plug
ignition coil
pressure sensor